Advanced Object Oriented Programming

Xingjie ZHANG

아주대학교
AJOU UNIVERSITY

高级面向对象编程

张行健

아주대학교
AJOU UNIVERSITY

아주대학교
AJOU UNIVERSITY

Advanced Object Oriented Programming

Instructor: Xingjie ZHANG

Email : xzhang@ajou.ac.kr

Wechat : runningSnaile

아주대학교
AJOU UNIVERSITY

高级面向对象编程

讲师：张行杰

Email : xzhang@ajou.ac.kr

Wechat : runningSnaile

CONTENTS

01 Before We Begin...

02 About employment

아주대학교 AJOU UNIVERSITY

目录

01 开始之前...

02 关于就业

아주대학교 AJOU UNIVERSITY

01

Before We Begin...

01

开始之前...

아주대학교 AJOU UNIVERSITY

Before we begin...

- A book about Java
- Basic knowledge background
  - CPU(Register, Cache), RAM, SSD, HDD
  - File system, OS
  - ASCII Code, Unicode, UTF-8, Encoding…
- Programming is difficult to finish in one go
  - Limitations of private education
- The Importance of CS Theory

在开始之前...

- 一本关于Java的书
- 基础知识背景
  - CPU(寄存器, 缓存), RAM, SSD, HDD
  - 文件系统, 操作系统
  - ASCII码, Unicode, UTF-8, 编码...
- 编程很难一次性完成
  - 私立教育的局限性
- CS理论的重要性

Terminology related to Windows OS

- File, Filename (Name + **Extension**)
  - Test.txt, abc.docx
- Folder, **Directory**, Path
  - C:\Windows\System\notepad.exe
- Absolute Path(Full Path) and Relative Paths
  - .\test.txt, ..\test.txt
- Binary and Text
  - Bit stream
  - .exe, .txt

与 Windows OS 相关的术语

- 文件，文件名（名称 + 扩展名）
  - Test.txt, abc.docx
- 文件夹，目录，路径
  - C:\Windows\System\notepad.exe
- 绝对路径（完整路径）和相对路径
  - .\test.txt ，..\test.txt
- 二进制和文本
  - 位流
  - .exe, .txt

Console Commands

- Command Prompt and Commands
- dir
  - Checking the List of Files Specified in a Directory
- cd
  - Changing Directory Locations

控制台命令

- 命令提示符和命令
- dir
  - 检查目录中指定的文件列表
- cd
  - 更改目录位置

Terminology related to Windows OS

- Executable Files
  - .exe, .dll, .sys
  - PE format (Portable Executable)
  - Native codes
- Programs and Processes
  - Word.exe is a **program**, and running word.exe creates a **process**.
  - The word process is an **instance** of word.exe.
- Threads
  - Individual computational "flows" that coexist within a process.

与 Windows OS 相关的术语

- 可执行文件
  - .exe, .dll, .sys
  - PE格式（可移植可执行文件）
  - 本地代码
- 程序和进程
  - Word.exe是一个程序，运行word.exe会创建一个进程。
  - 进程是word.exe的一个实例。
- 线程
  - 在进程中共存的独立计算"流"。

Common sense about computer architecture

- Computer, CPU, RAM, Address, Access, Reference

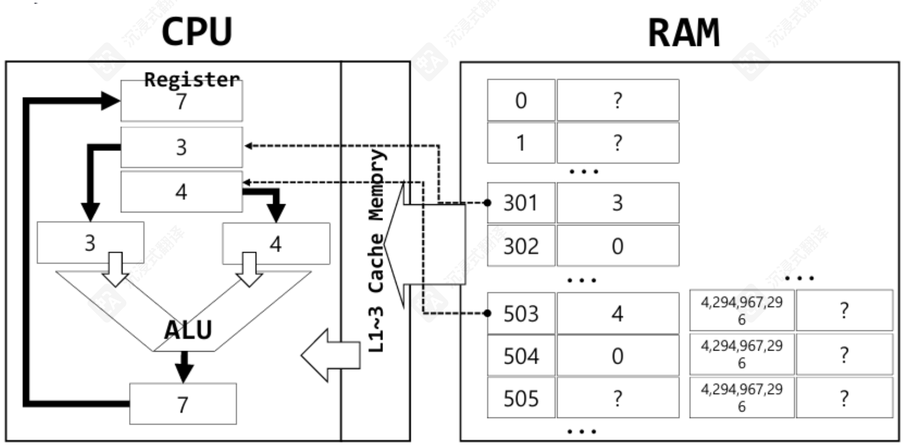

计算机体系结构的常识

- 计算机，CPU，RAM，地址，访问，引用

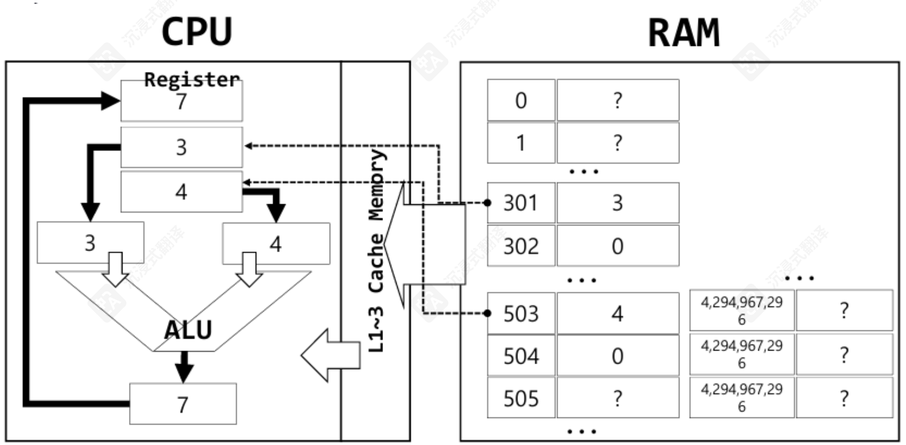

Memory structure

- IP(Instruction Pointer), PC(Program Counter), Lock

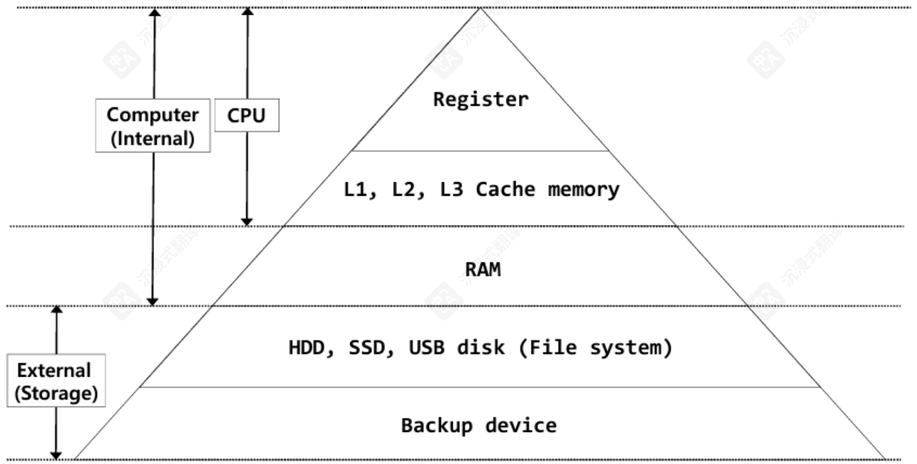

内存结构

- IP（指令指针），PC（程序计数器），锁定

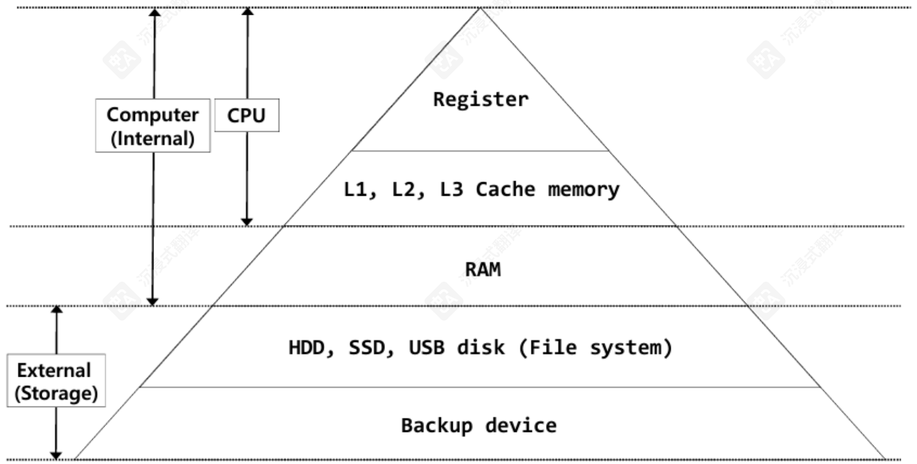

Base conversion 进制转换

Decimal	Binary	Octal	Hexadecimal
0	0000	00	0
1	0001	01	1
2	0010	02	2
3	0011	03	3
4	0100	04	4
5	0101	05	5
6	0110	06	6
7	0111	07	7
8	1000	10	8
9	1001	11	9
10	1010	12	A
11	1011	13	B
12	1100	14	C
13	1101	15	D
14	1110	16	E
15	1111	17	F

Decimal	Binary	Octal	Hexadecimal
0	0000	00	0
1	0001	01	1
2	0010	02	2
3	0011	03	3
4	0100	04	4
5	0101	05	5
6	0110	06	6
7	0111	07	7
8	1000	10	8
9	1001	11	9
10	1010	12	A
11	1011	13	B
12	1100	14	C
13	1101	15	D
14	1110	16	E
15	1111	17	F

Terminology related to Windows OS

- The essence of execution is a **CPU operation** (a set of instructions).
- Information required for the operation must be **retrieved from memory(RAM)**.
- The operation is then transferred from memory to **CPU registers**, where it is then performed.
- The register values containing the operation results are then **sent back to memory**, repeating the process.
- This flow of instructions is called **context**.

与Windows OS相关的术语

- 执行的本质是一种CPU操作（一组指令）。
- 操作所需的信息必须从内存(RAM)中检索。
- 然后，操作从内存传输到CPU寄存器，在那里执行。
- 包含操作结果的寄存器值随后被发送回内存，重复该过程。
- 这组指令的流程称为上下文。

Another name for execution is 'operation'

- Context Switching, Platform, Dependency, Compile, Native code
- JVM(Java Virtual Machine), JNI(Java Native Interface)

执行的另一个名称是'操作'

- 上下文切换，平台，依赖，编译，本地代码
- JVM(Java虚拟机), JNI(Java本地接口)

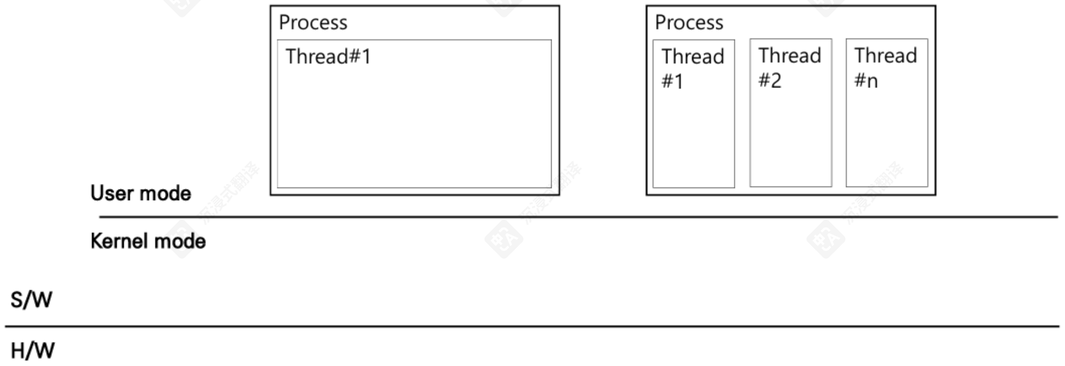

Quiz

- What is the main reason why understanding basic computer science theory is important when learning Java development?

A. It helps memorize specific programming language syntax.
B. It makes it easier to keep up with rapidly changing technological trends.
C. It's essential for solving coding test questions.
D. It provides a foundation for a deep understanding of programming languages and frameworks.

Quiz

- 学习Java开发时，理解基本的计算机科学理论为什么重要？主要原因是什么？

A. 它有助于记忆特定的编程语言语法。
B. 它使得跟上快速变化的技术趋势变得更加容易。
C. 它是解决编程测试问题的必要条件。
D. 它为深入理解编程语言和框架提供了基础。

Quiz

- In the Windows file system, what is the name of a path that indicates the entire location of a file or directory, from beginning to end, such as ***C:\\Windows\\system***?

A. Relative path
B. File name
C. Extension
D. Absolute path

Quiz

- 在 Windows 文件系统中，表示什么名称的路径？文件或目录的完整位置，从头到尾，例如作为 ***C:\\Windows\\system***？

A. 相对路径
B. 文件名
C. 扩展
D. 绝对路径

Quiz

- What is the "running state" in which an installed executable file (program) is loaded into memory, allocated CPU resources, and actually executed?

A. Program
B. Compile
C. Process or Instance
D. Native Code

Quiz

- “运行状态” 是什么，其中安装的可执行文件实际执行? (program) 被加载到内存中，分配CPU资源，并实际上执行?

A. 程序
B. 编译
C. 进程或实例
D. 本地代码

Quiz

- What term describes the basic operation of the CPU accessing a specific location in computer memory (RAM) to read or write data?

A. Operation
B. Execution
C. Referencing or Accessing
D. Caching

Quiz

- 什么术语描述了CPU访问计算机内存（RAM）中特定位置以读取或写入数据的基本操作?

A. 操作
B. 执行
C. 引用或访问
D. 缓存

Quiz

- What is the smallest unit of work flow that runs independently within a single program (process)?

A. Process
B. Instance
C. Thread
D. Context

Quiz

- 什么是单个程序（进程）中独立运行的最小工作单元?

A. 进程
B. 实例
C. 线程
D. 上下文

01

About Employment

01

关于就业

아주대학교 AJOU UNIVERSITY

Java learning order

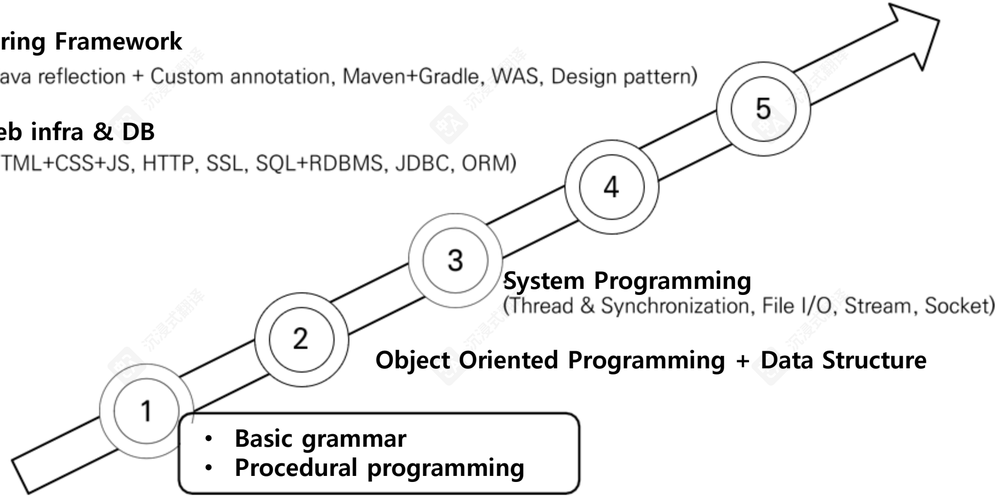

Low dependence on specific languages

Java 学习顺序

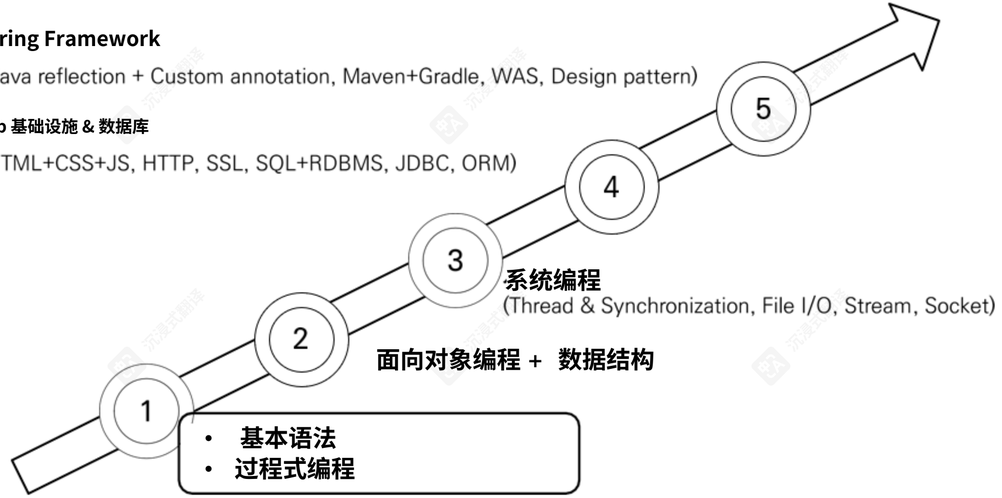

对特定语言的依赖性较低

Learning Objectives

- Understanding Procedural Programming
  - Defining problems and writing about solutions is the first step.
  - Never think while typing, A common way for developers to leave things to chance.
  - Practice understanding variables, constants, and ranges is necessary.
- Java Language Grammar
  - It's important to write all examples yourself.
  - Learn the concepts and grammar of classes, excluding object-oriented programming.
- Object Oriented Programming

学习目标

- 理解过程式编程
  - 定义问题并撰写解决方案是第一步。
  - 打字时不要思考，这是开发者将事情交给运气的常见方式。
  - 练习理解变量、常量和范围是必要的。
- Java 语言语法
  - 亲自编写所有示例非常重要。
  - 学习类的基本概念和语法，不包括面向对象编程。
- 面向对象编程

Realistic Story - Employment

- Good Companies vs. Companies with Poor Conditions
- The moments when a skilled senior engineer shines are in responding to failures.
  - Recognizing failure situations, and establishing a monitoring system.
  - Rapid response and root cause identification are separate issues.
  - In any case, a strong understanding of infrastructure is essential.

- If you want to work for a good company, first become the talent they want or the person they want to work with.
  - Stick to the basics (your workplace **is not a training center**).
  - You must be able to **exchange opinions on issues**.

现实故事 - 就业

- 优秀公司与条件差的公司
- 资深高级工程师在处理故障时才能展现其才华。
  - 识别故障情况，并建立监控系统。
  - 快速响应和根本原因识别是分开的问题。
  - 在任何情况下，对基础设施的深刻理解都是必不可少的。

- 如果你想为一家好公司工作，首先要成为他们想要的才能或他们想要合作的人。
  - 坚持基础（你的工作场所不是培训中心）。
  - **你必须能够就问题交换意见。**

Time to get familiar with programming

- For adults, 4 hours per day for at least 21 days.
- Generally, 2 months or more.
- Six months of learning programming, data structures, and OOP concepts is recommended.
  - Procedural Programming (2 months)
  - Data Structures and Algorithms (2 months)
  - OOP (2 months)

是时候熟悉编程了

- 对于成年人，每天至少4小时，持续21天以上。
- 通常，2个月或更长时间。
- 建议学习编程、数据结构和面向对象编程概念6个月。
  - 过程式编程（2个月）
  - 数据结构与算法（2个月）
  - 面向对象编程（2个月）

Developer's Basics

开发者的基础知识

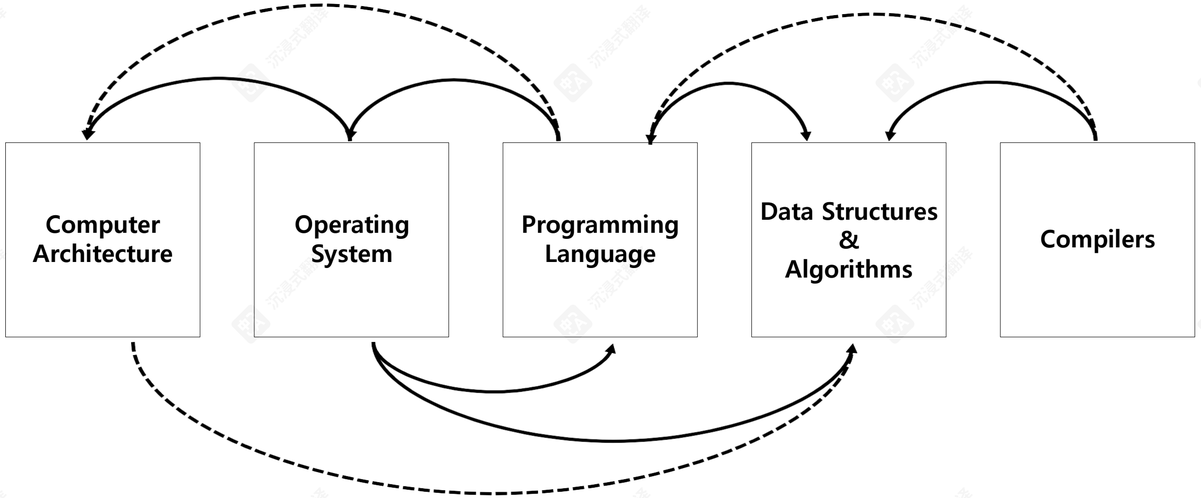

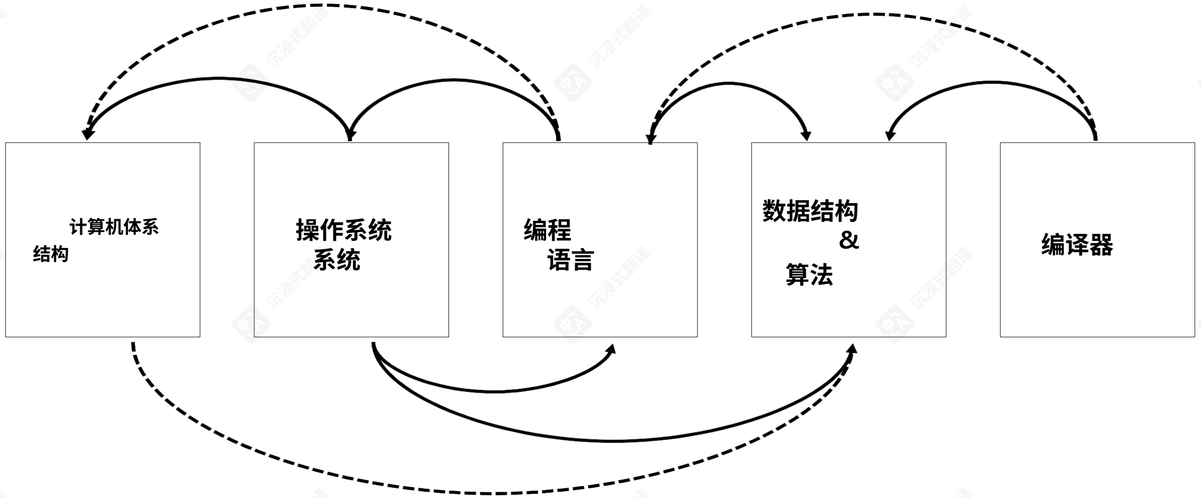

Q & A

问答

THANK YOU

谢谢